hansgrohe

PuraVida
Thermostatic Trim with Volume Control and Diverter
Finishes : **white/chrome** Part no. : **15771401**

Description

Features

- Volume control and diverter for 2 outlets
- Flow: 7.00 GPM (26.5 L/Min)
- Thermostatic cartridge, Shut-off/ diverter valve
- Anti-scald 100° safety stop

Item details

List Price	$ 847.00

Compliance

Product image

Scale drawing

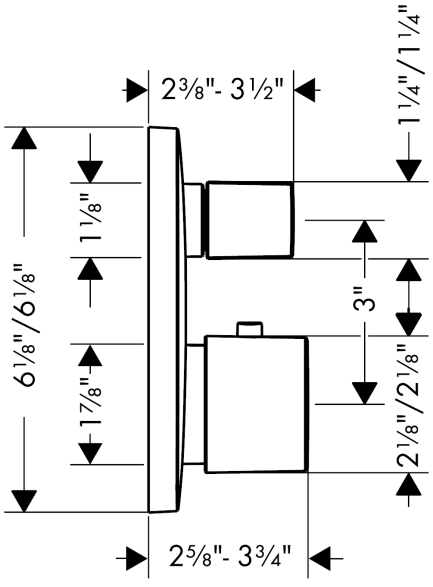

PuraVida
Thermostatic Trim with Volume Control and Diverter
Finishes : **white/chrome** Part no. : **15771401**

Exploded drawing

Year of production: **>04/11**

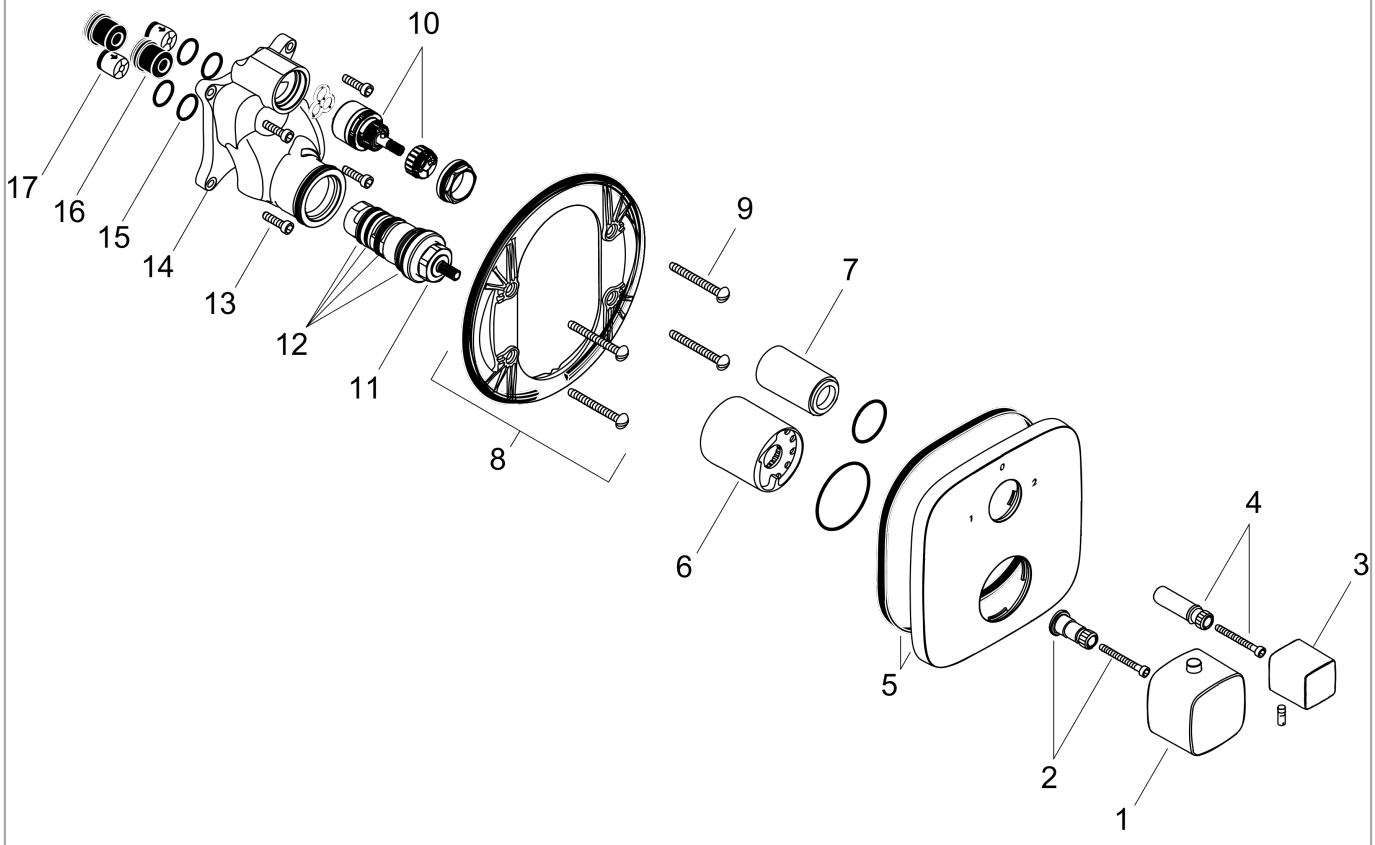

PuraVida
Thermostatic Trim with Volume Control and Diverter
Finishes : **white/chrome** Part no. : **15771401**

Spare parts list

Year of production: **>04/11**

Pos.	Description	Part no.	Price	PU
1	handle for thermostat	11791401	-	1
2	adapter for handle	96435000	-	1
3	handle	95356400	-	1
4	adapter for handle	95256000	-	1
5	escutcheon 155 / 155 mm	95662000	-	1
6	sleeve	96439000	-	1
7	sleeve	95253000	-	1
8	holder for escutcheon	98793000	-	1
9	set of fixing screws	96454000	-	1
10	shut off unit with selector	98283000	-	1
11	thermostat cartridge	94282000	-	1
12	sealing set	95037000	-	1
13	set of screws	96525000	-	1
14	installation unit cpl.	92592000	-	1
15	O-ring 16x2	98133000	-	1
16	noise reduction	94073000	-	1
17	set of non return valves DW 15	94074000	-	1
a	extension 25 mm	13595000	-	1
b	extension 22 mm	15597000	-	1
c	non return valve with filter	92499000	-	1
d	O-ring 29x3	98371000	-	1
e	O-Ring 48x3	95508000	-	1